CONNECTOR AND HARNESS ROUTING

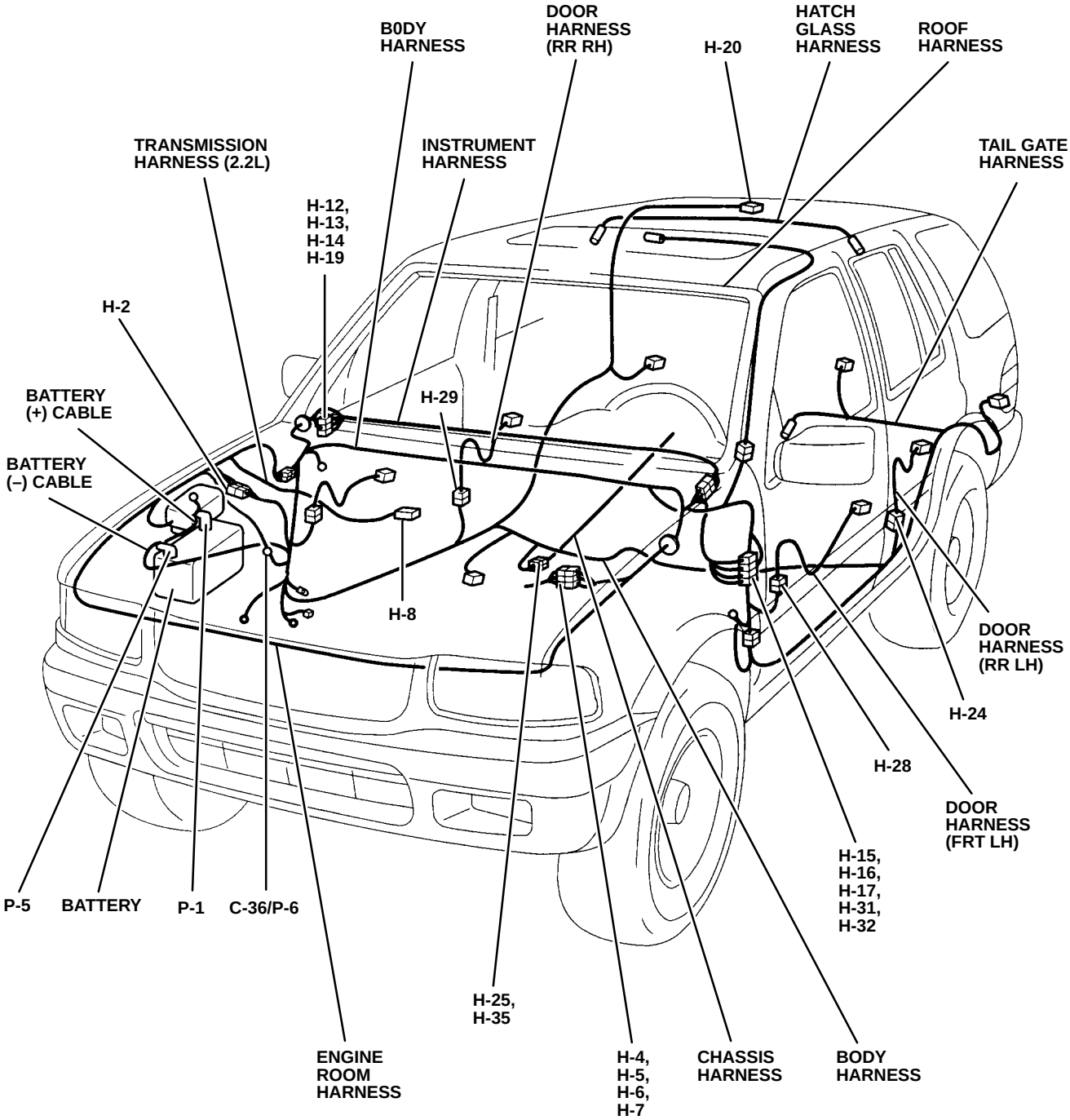

2.2L

CONNECTOR AND HARNESS ROUTING

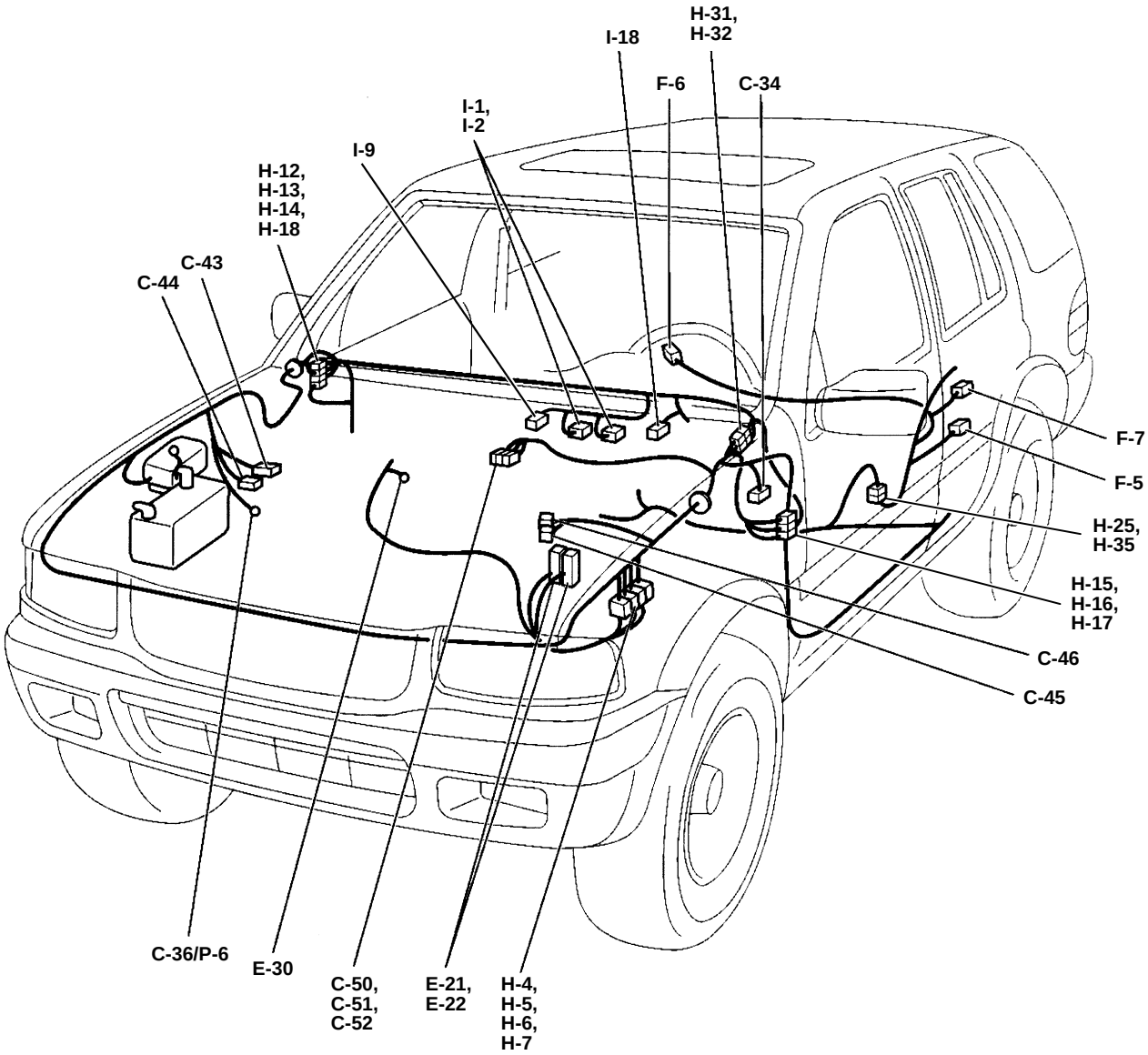

3.2L

CONNECTOR AND HARNESS ROUTING

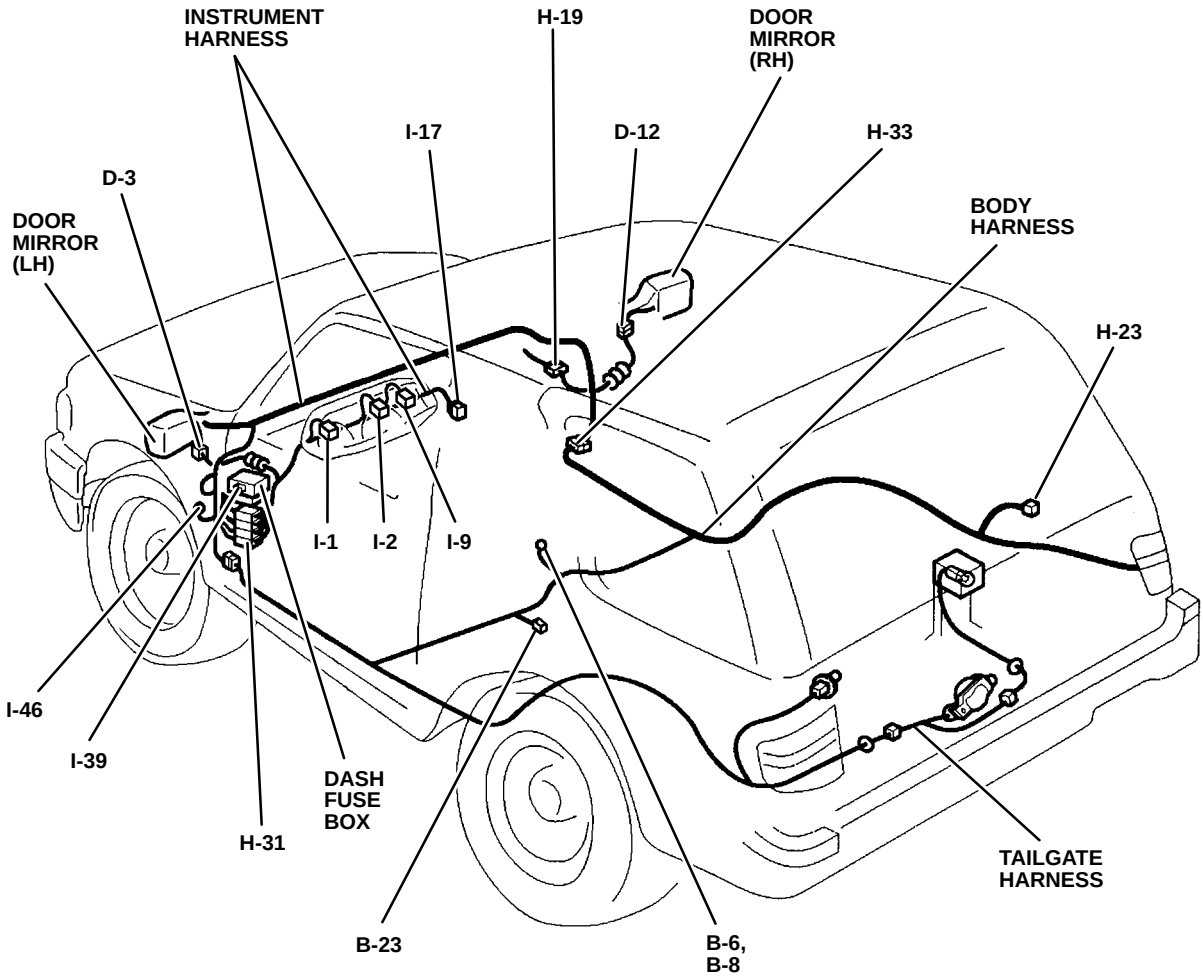

Amigo

CONNECTOR AND HARNESS ROUTING

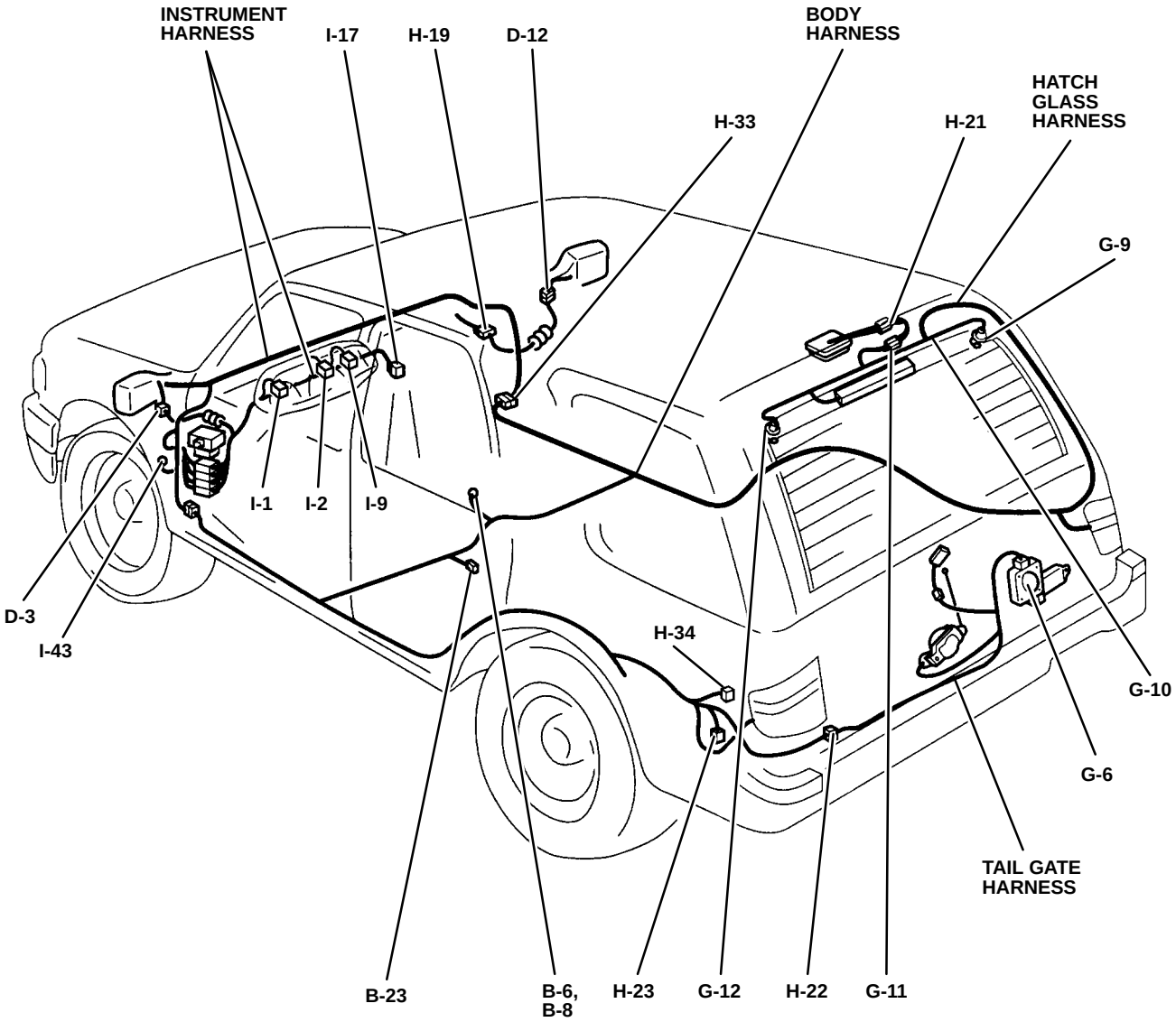

Rodeo

CONNECTOR AND HARNESS ROUTING

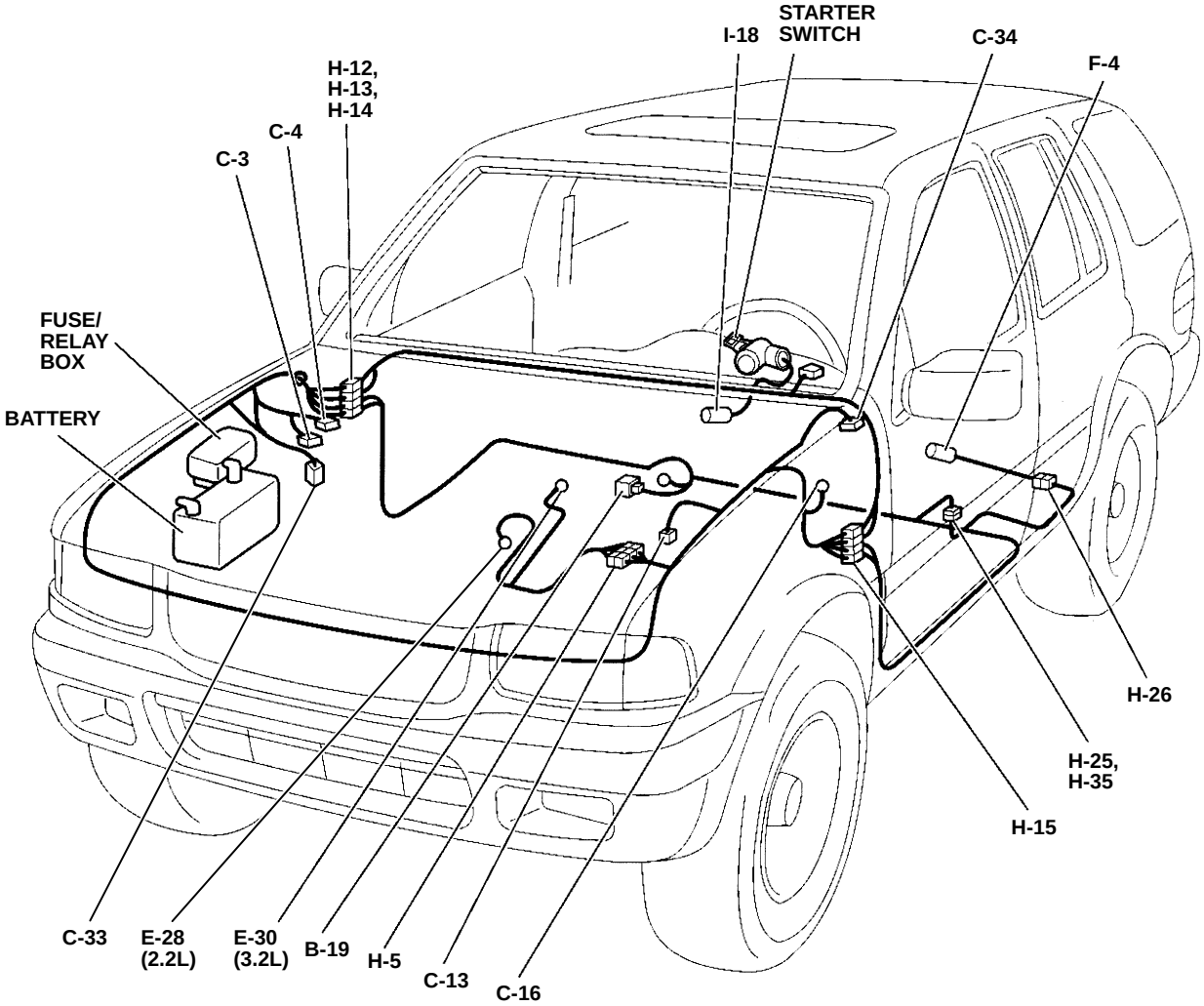

CONNECTOR AND HARNESS ROUTING

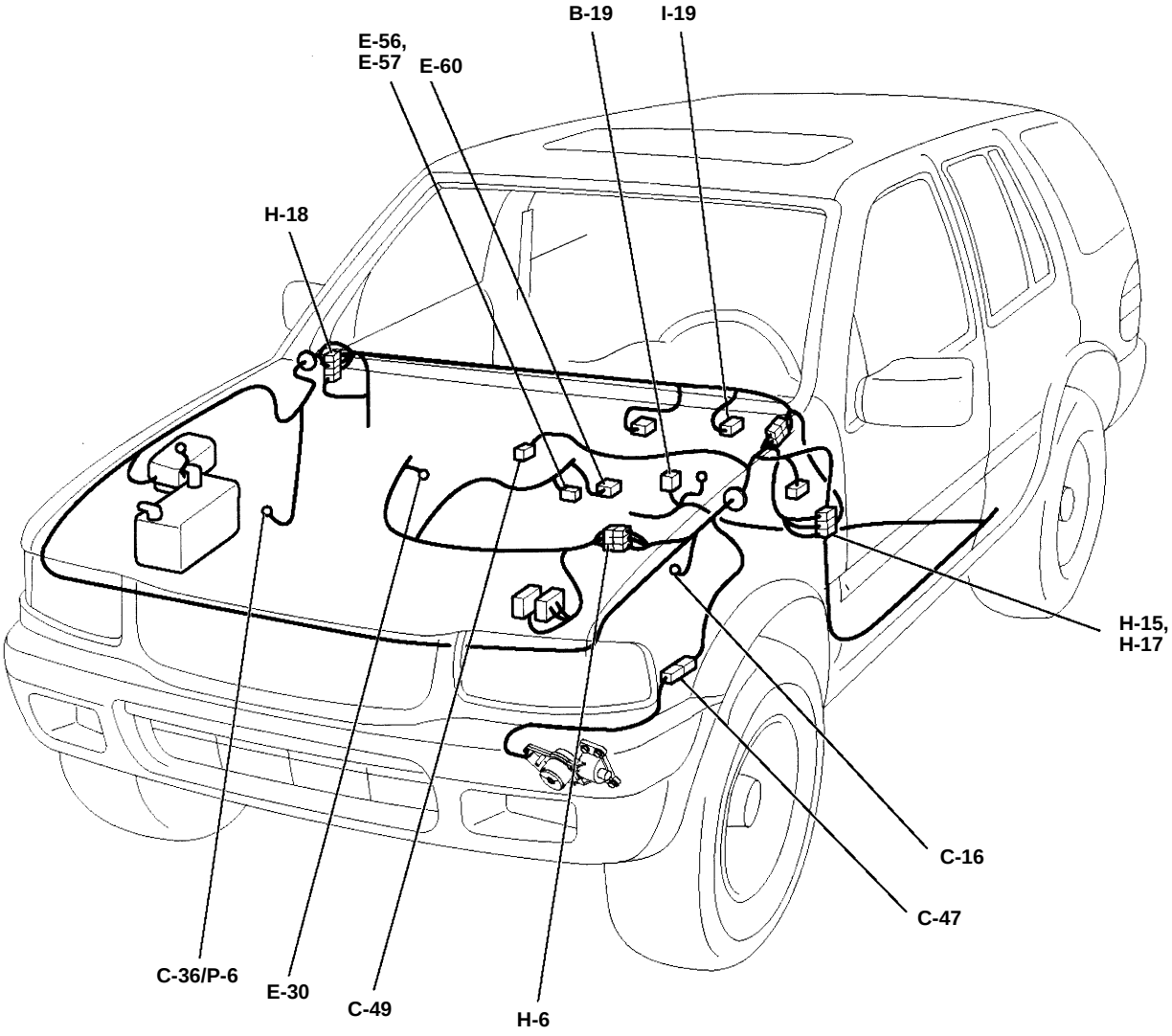

CONNECTOR AND HARNESS ROUTING

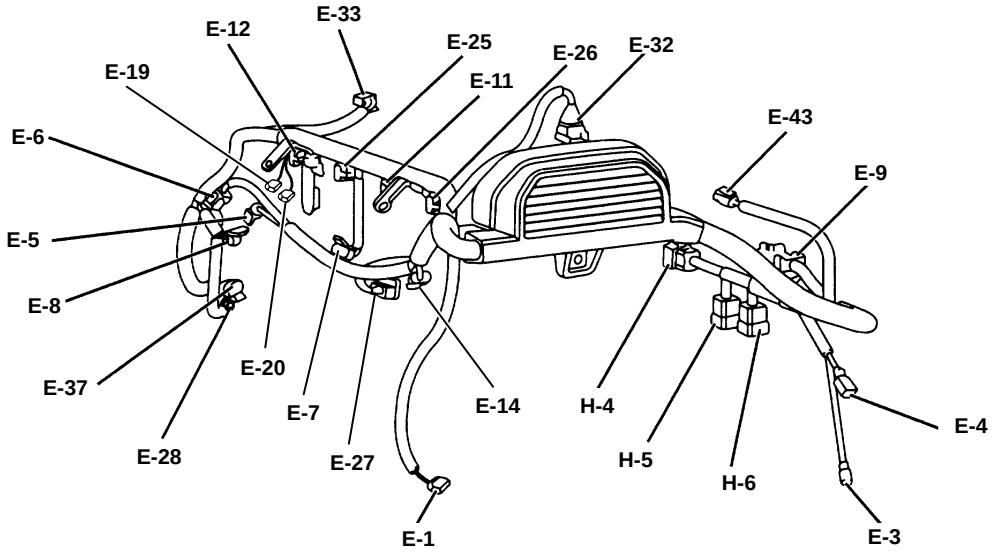

2.2L

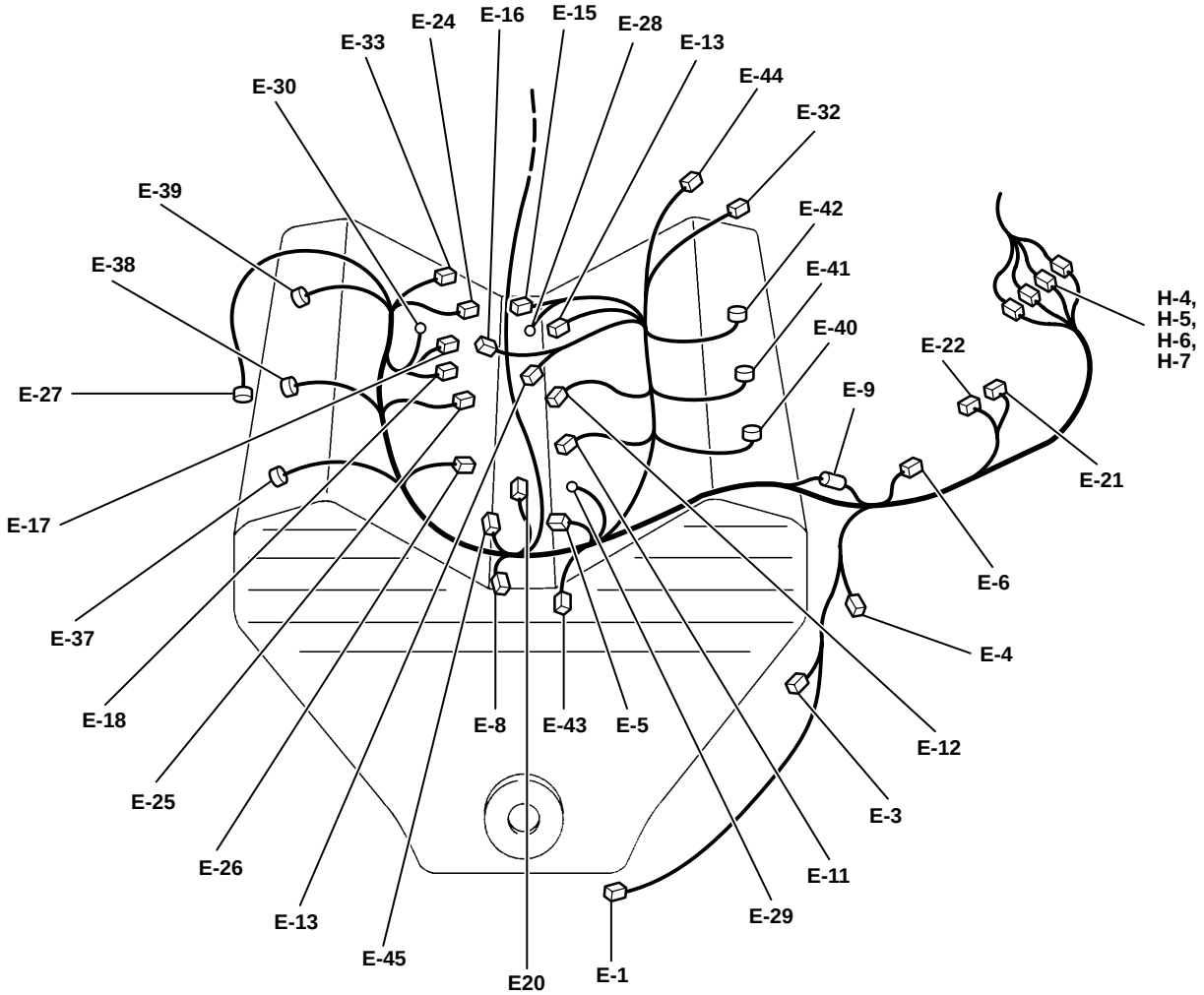

3.2L